GIA REPORT 2145167459

GIA
GEMOLOGICAL INSTITUTE OF AMERICA®

Facsimile

5355 Armada Drive | Carlsbad, CA 92008-4602
T: 760-603-4500 | F: 760-603-1814

GIA Laboratories
Bangkok Carlsbad Gaborone
Johannesburg Mumbai New York

www.gia.edu

COLORED DIAMOND GRADING REPORT

March 01, 2012

Shape and Cutting Style ..... **Emerald Cut**
Measurements ..... 5.96 x 5.16 x 3.68 mm

GRADING RESULTS

Carat Weight ..... **1.00 carat**
Color
Origin ..... **NATURAL**
Grade ..... **FANCY**
..... **PURPLE-PINK**
Distribution ..... **Even**
Clarity Grade **VS1**

ADDITIONAL GRADING INFORMATION

Finish
Polish ..... Good
Symmetry ..... Very Good
Fluorescence ..... Medium Blue
Comments:
Internal graining is not shown.
Inscription:
54521

REFERENCE DIAGRAMS

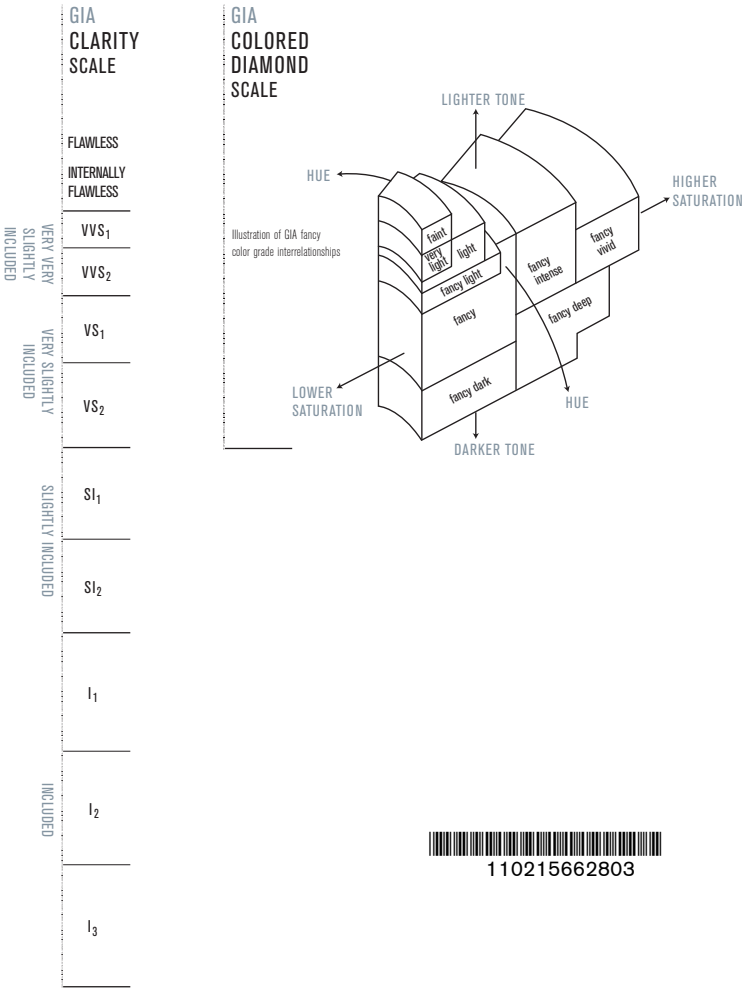

110215662803

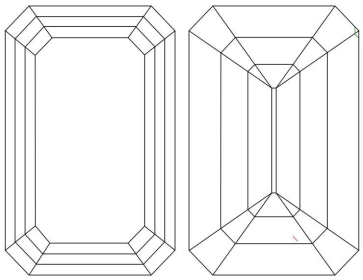

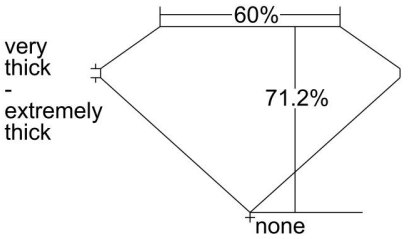

Profile not to actual proportions

KEY TO SYMBOLS

Feather
Natural

Red symbols denote internal characteristics (inclusions). Green or black symbols denote external characteristics (blemishes). Diagram is an approximate representation of the diamond, and symbols shown indicate type, position, and approximate size of clarity characteristics. All clarity characteristics may not be shown. Details of finish are not shown.

This is a digital representation of the original GIA Report. To verify the information herein, please refer to reportcheck.gia.edu. This Report is not a guarantee, valuation or appraisal and contains only the characteristics of the diamond described herein after it has been graded, tested, examined and analyzed by the laboratory providing this Report ("GIA") and/or has been inscribed using the techniques and equipment used by GIA at the time of the examination and/or inscription. Inscriptions reported in this document are not a guarantee, validation, or warranty of a diamond's quality, country of origin or source; or that the diamond will be identifiable by the inscription in the future (since inscriptions can be removed). GIA makes no representation concerning any trademark, word, or symbol which is inscribed by GIA or which is identified on this Report. The recipient of this Report may wish to consult a credentialed jeweler or gemologist about the information contained herein.

For terms, conditions, and limitations, see www.gia.edu/terms or call 800-421-7250 or 760-603-4500.

The security features in this document exceed document security industry guidelines.

©2010 GEMOLOGICAL INSTITUTE OF AMERICA, INC.